Software-Defined Networking (Continued)

CS640, 2015-04-23

Announcements

- Assign #5 released -- due Thursday, May 7 at 11pm

Outline

- Recap
- SDN Stack
- Layer 2 Learning Switch
- Control Application Design Considerations
- Challenges and Ongoing Research

Recap: SDN Motivation

- ***What were the key limitations of traditional networks?*
  - Distributed routing decisions -> difficult to debug; maybe suboptimal decisions
  - Distributed policy -> prone to inconsistencies
  - Policies defined over subnets -> cannot customize forwarding per application
  - Closed software stack -> limited flexibility
- ***How does SDN address this issues?*
  - Centralized control
    - Global view to make optimal decisions
    - Theoretically, avoid the complexities of distributed algorithms
  - Operator-provided control applications
    - Can control forwarding however you want -- e.g., implement IETF April Fool's RFC for "green routing"
  - Flexible forwarding decisions
    - Match on 10 packet header fields (arbitrary byte matching in newest OpenFlow)
    - Forward, drop, modify, or send packets to the controller (for arbitrary processing)
- **Problems with SDN?
  - Central controller can become bottleneck, and is single point of failure

OpenFlow Flow Table

- Traditional route table

Subnet	Mask	Gateway	Interface

- Flow table

Iface	Src MAC	Dst MAC	VLAN	Ether Type	Src IP	Dst IP	Proto	Src Port	Dst Port	Actions

  - Actions: forward to port(s), drop, rewrite header field(s), send to controller
  - Rules can have timeouts
    - Soft timeout -- switch removes rule if no packet matches it for some period of time
    - Hard timeout -- switch removes rule after some period has elapsed since it was added
  - Rules can have priorities
  - Switch also maintains statistics (packet and byte counters) for each rule

- ***What rule should we install if we want to…*
    - Forward all HTTP traffic out iface 3?
    - Forward SSH traffic from a host with IP 10.0.0.5 out iface 4?
    - Do network address translation (NAT)?
    - Forward HTTP GET requests out iface 1?
- Packet sent to controller if no forwarding entry matches
    - Controller passes packet to control app(s)
    - Control app decides whether to:
        - Add a new rule(s) in one or more switches
        - Modify or drop packet
        - Have switch send packet out specific iface
- Switch also sends messages to controller when:
    - Switch starts
    - Switch port goes up/down
    - Receives a request for statistics

SDN Stack

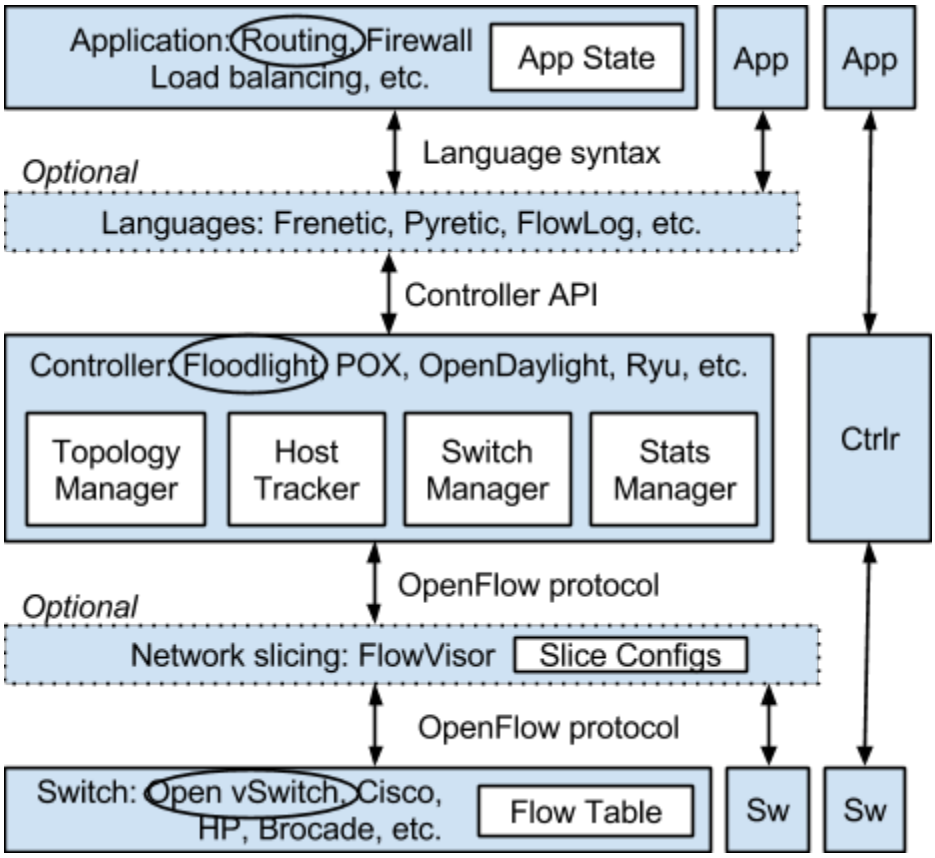

Layer 2 Forwarding

- Hello world of SDN apps
- ***What options do we have?*
    - Flood
    - Learn about locations of hosts
    - Look at network topology and find the path
        - A traditional L2 switch cannot do this, but we can do this with SDN
- ***What is the psuedo-code for flooding?*
    - When get packet from switch, send it back to the switch and tell it to flood
    - Or, install a rule for each input port to flood any packets
- ***What is the psuedo-code for learning?*
    - if (source mac address is new)
      record the source mac and input port mapping
      if (destination mac address is known)
      install a flow table rule
      forward the packet to the destination
      else
      FLOOD the packet
- Look at network topology and find the path -- this is what you will do for assign #5

Motivating Applications

- Dynamic access control

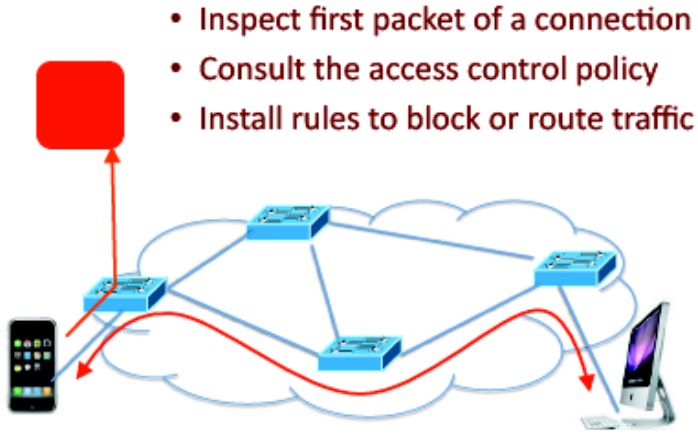

- Seamless mobility

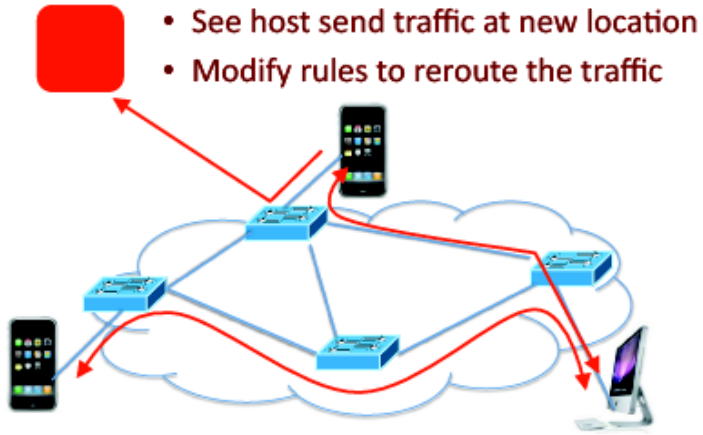

- Server load balancing

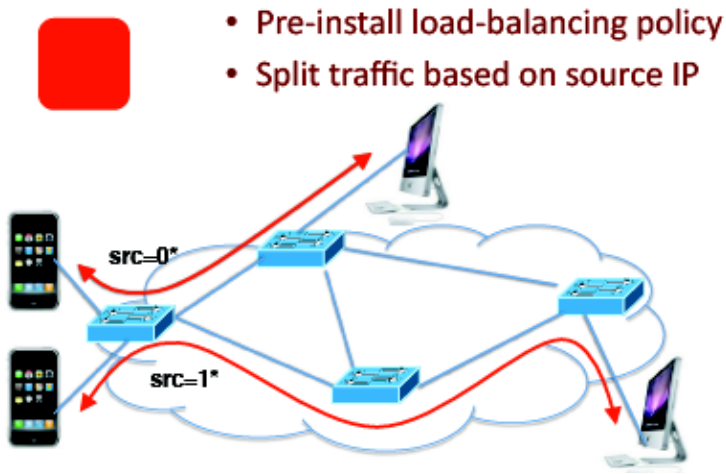

- Google uses SDN in their WAN

Control App Design Considerations

- Per-flow vs. coarser rules
  - Per-flow (flow=TCP connection) rules allow fine-grained control of network traffic
    - E.g., network address translation for each flow
    - E.g., round robin load balancing of flows across links and/or servers

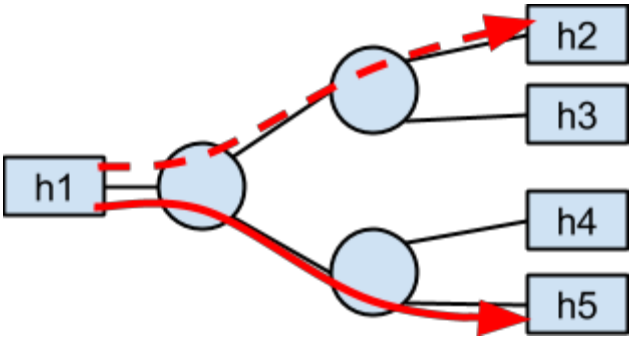

    - Requires as many flow entries as flows!
      - Border of college of engineering network has 300 new flows per second ⇒ flow table of 1500 entries (capacity of first generation OpenFlow switches) is exhausted in about 5 seconds
      - Combat flow table size limits with very short timeouts
  - Coarser rules require less resources at switches, but are less flexible
    - Per src/dst host pair, per dst host, per dst subnet, per dst TCP port, etc.

- Proactive vs. reactive rule installation
  - Proactive installs rules ahead of time
    - Usually based on observing the topology
    - E.g., install paths between all switches when hosts start

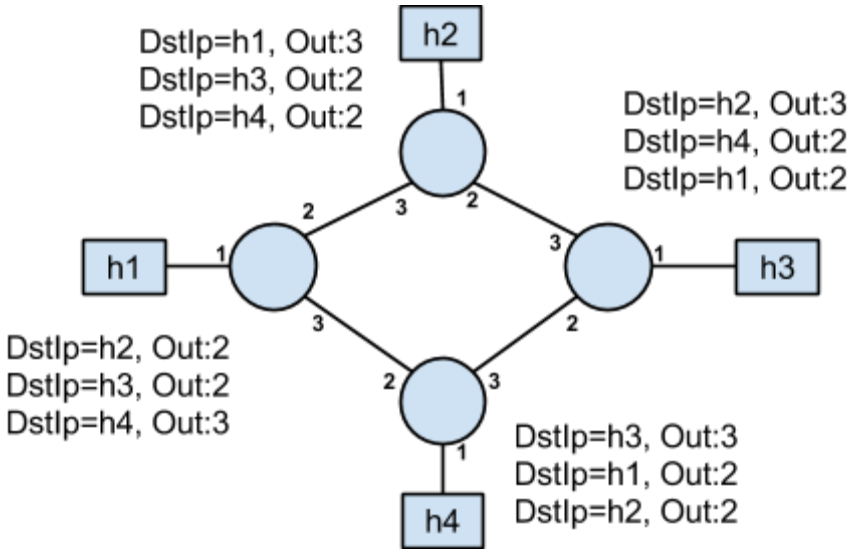

  - Reactive installs rules when packets arrive
    - Usually based on the first packet of every flow (flow = TCP connection)
    - E.g., install paths for specific flow between hosts when flow starts

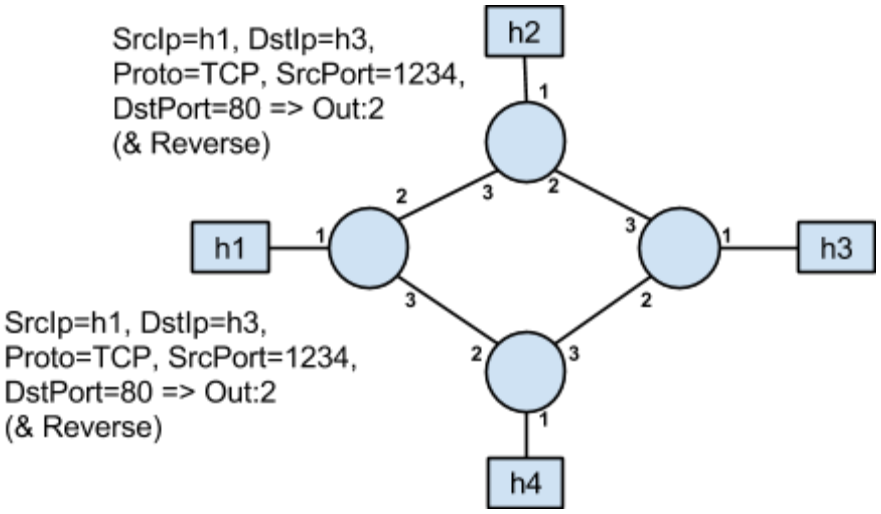

Challenges and Ongoing Research

Controller Delay and Overhead

- Controller is much slower the the switch
- Processing packets leads to delay and overhead
- Need to keep most packets in the "fast path"

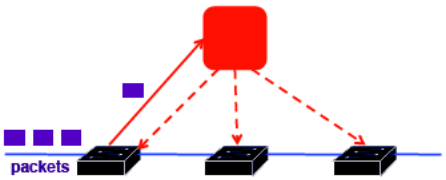

Distributed Controller

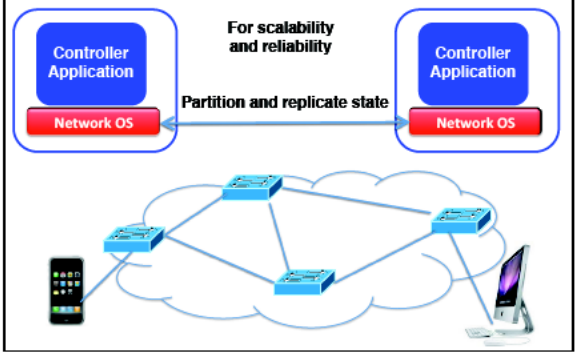

Testing and Debugging

- OpenFlow makes programming possible
  - Network-wide view at controller
  - Direct control over data plane
- Plenty of room for bugs
  - Still a complex, distributed system
- Need for testing techniques
  - Controller applications
  - Controller and switches
  - Rules installed in the switches

Programming Abstractions

- Controller APIs are low-level
  - Thin veneer on the underlying hardware
- Need better languages
  - Composition of modules
  - Managing concurrency
  - Querying network state
  - Network-wide abstractions
- Ongoing at Princeton
  - http://www.frenetic-lang.org/