OS Support for Virtualizing Hardware Transactional Memory

Michael M. Swift, Haris Volos,
Luke Yen, Neelam Goyal,
Mark D. Hill and David A. Wood

University of Wisconsin—Madison

The Virtualization Problem of HTM

What should happen to a transaction when the Operating System virtualizes a processor or memory?

1. Abort the transaction
2. Go non-speculative
3. Switch to software
4. Virtualize the transaction

Why virtualize?

1. Not virtualizing requires undoing the transaction
   - Aborts take time
   - Blocks other threads until complete
   - Example: aborting a 2048-page TX takes 1,000 μs
2. Invoking OS services may require blocking
   - Locks, reversible I/O
3. Limits generality of TM as compared to locks

Importance of Virtualization

Profile results from Sun T1000 32 thread machine, 256 MB/process

Application		Locked Context Switches		Page Faults	
Name	Workload	Voluntary	Invol.	Rate	Locked Rate
BIND 9.0	QueryPerf	1494.0	26.0	0.00	0.000
Apache 2.0	SpecWeb99	555.0	0.5	0.50	0.000
AOLServer	ApacheBench	0.1	2.0	0.00	0.000
Firefox	Browsing	12.0	1.5	0.23	0.007
OpenOffice	Editing	0.1	2.0	0.25	0.130

Virtualizing HTM

- We implemented TVM, an OpenSolaris kernel module that:
  - Virtualizes a variant of LogTM-SE
  - Supports context switching and paging
  - Hooks the kernel in 9 places
  - Comprises 1120 lines of code
  - Adds less than 2% runtime overhead

Outline

- Introduction
- Hardware Overview
- OS support for virtualization
- Evaluation
- Conclusion

LogTM-VSE Hardware Overview

- Version management:
  - Update in place, old values logged in VM

LogTM-VSE Regular Operation

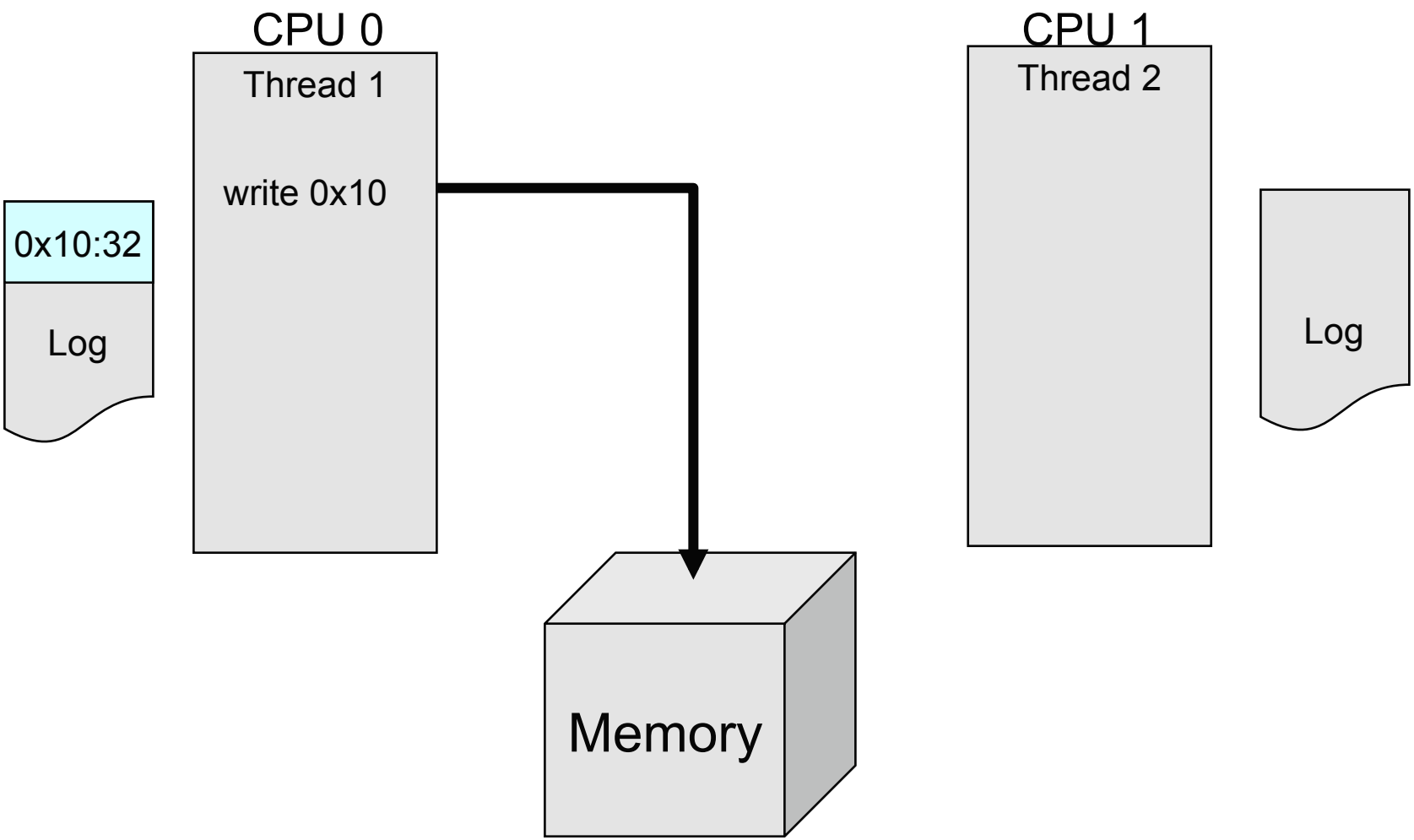

LogTM-VSE Hardware Overview

- Version management:
  - Update in place, old values logged in VM
- Conflict detection:
  - Read/write addresses hashed into signature
  - Coherence reqs. check signature for conflicts

LogTM-VSE Regular Operation

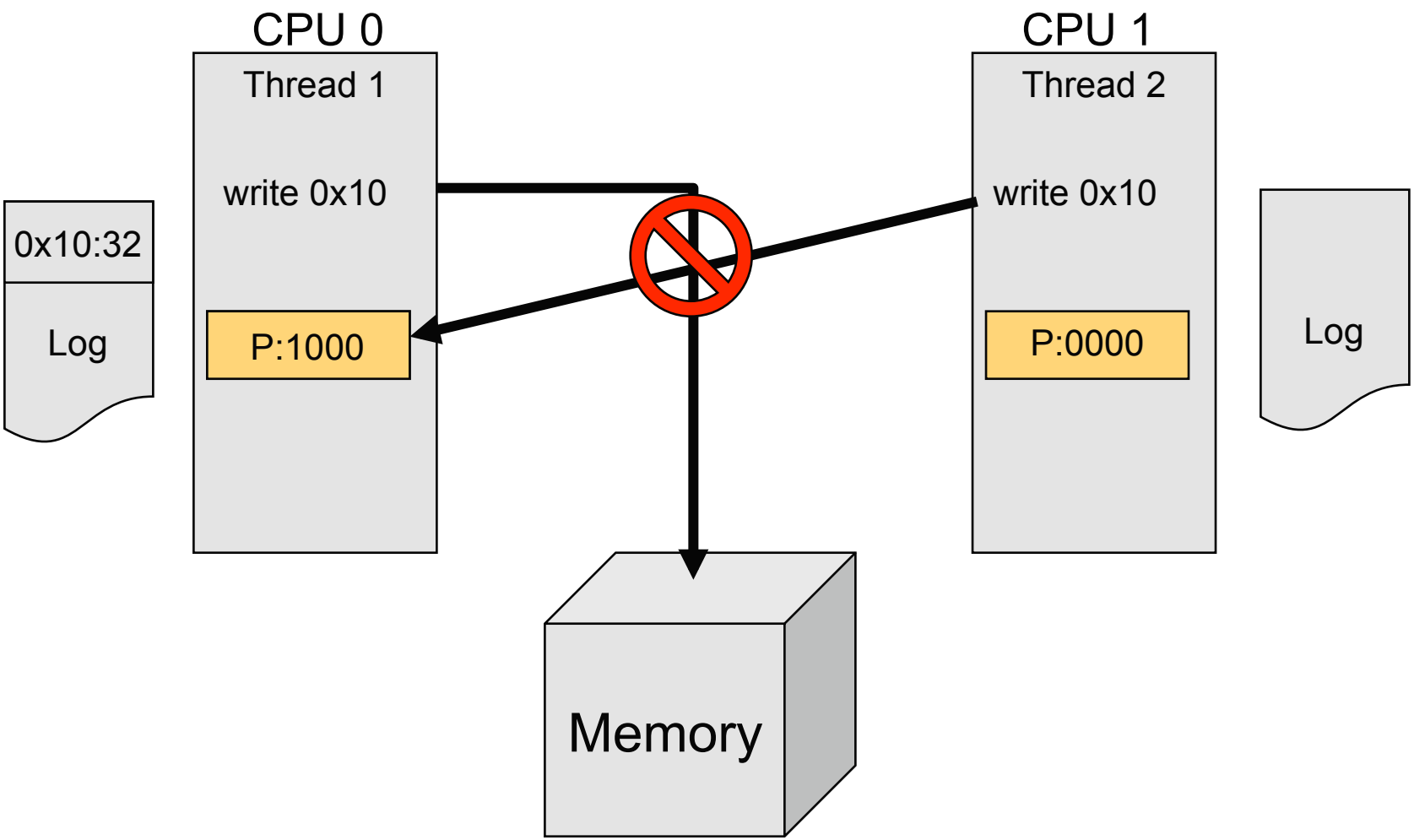

LogTM-VSE Hardware Overview

- Version management:
  - Update in place, old values logged in VM
- Conflict detection:
  - Read/write addresses hashed into signature
  - Coherence reqs. check signature for conflicts
- Virtualization
  - Adds virtual signatures for paging
  - Summary signature for conflict detection on suspended transactions

Virtualizing a Transaction

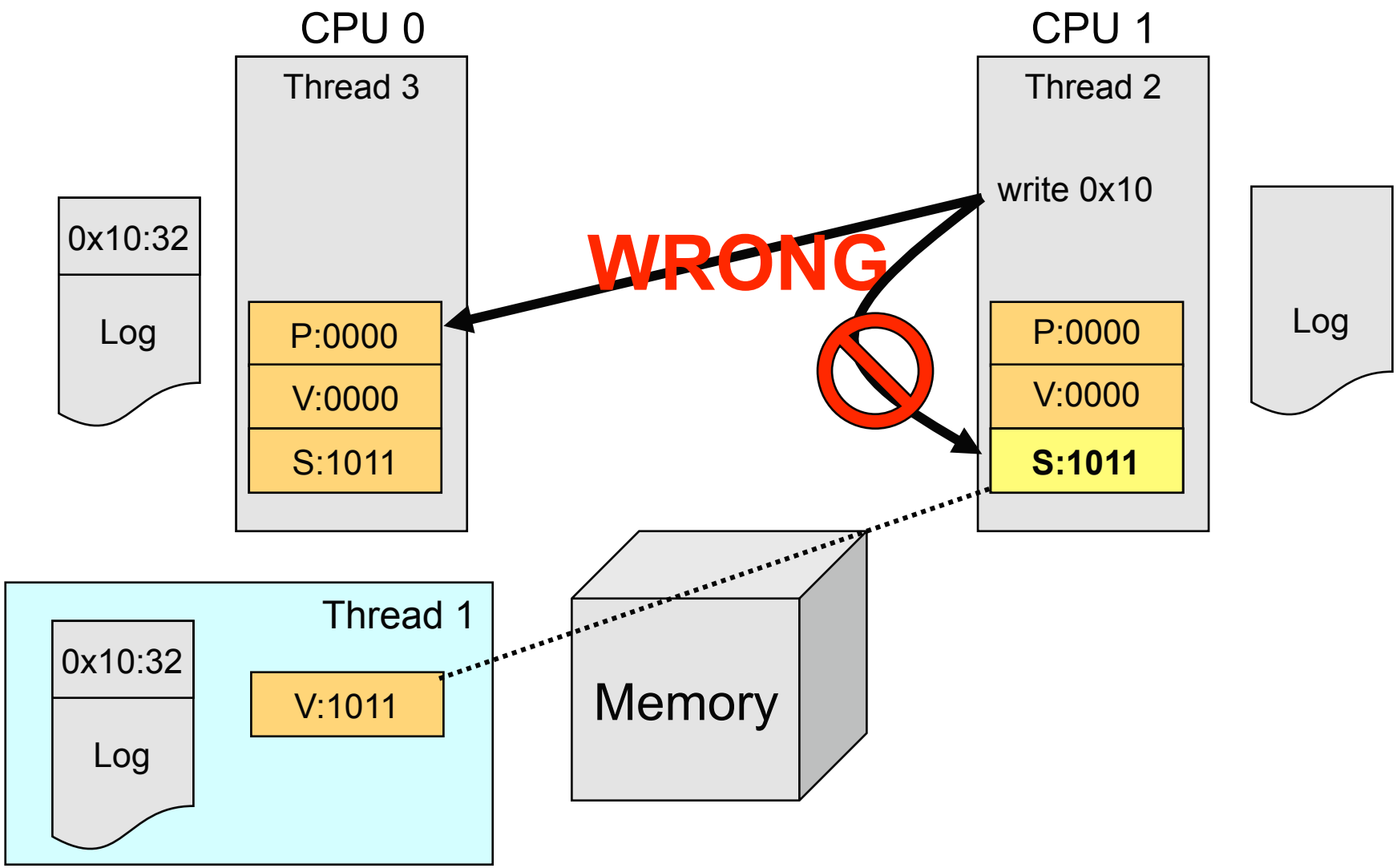

Outline

- Introduction
- Hardware Overview
- OS support for virtualization
  - Context switching
  - Paging
- Evaluation
- Conclusion

Virtualizing TX with TVM

- Transaction Virtualization Manager (TVM) enforces isolation of virtualized TX
  - Hooks OpenSolaris in 9 places
  - Computes & distributes summary signatures

Context Switching

- TVM hooks the OpenSolaris kernel in 4 places
  - `savectx()`: save virtual signature, distribute new summary
  - `restorectx()`: restore virtual signature
  - Complete virtual transaction: distribute new summary
  - Summary conflict: forward to contention manager

Optimizations

- Why distribute new summaries synchronously?
  - Lazy completion defers update on transaction complete
  - Lazy summary update defers update on thread suspend to reduce latency

Lazy Summary Update

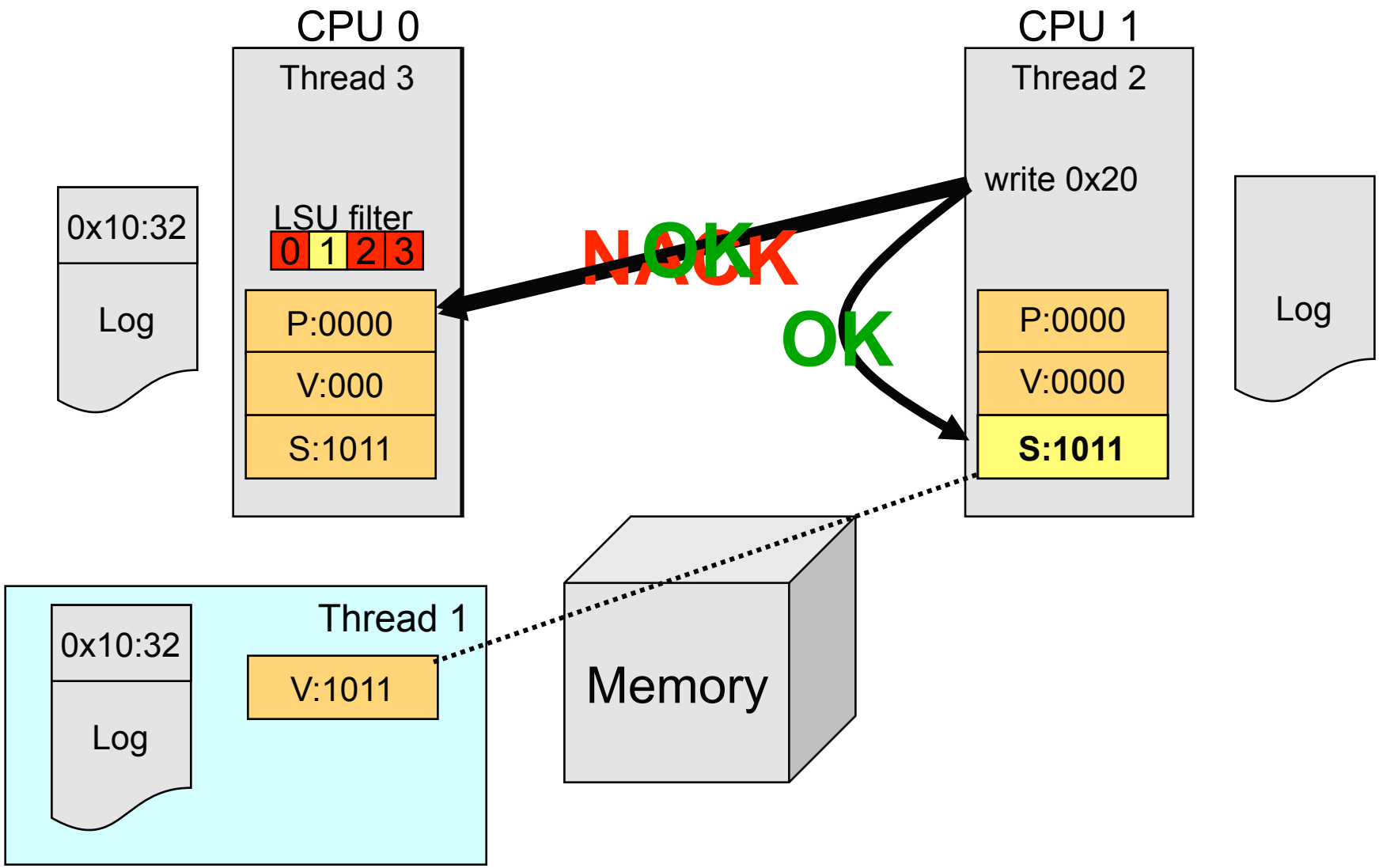

Paging Transactional Data

- What happens when the kernel changes the address mapping for a page?
  - On paging
  - On copy-on-write

Virtualize Transactions!

- Details in paper

TVM Summary

- TVM manages summary signatures to virtualize transactions
- TVM is implemented as an OpenSolaris kernel module
  - 1120 lines of code
    - Context Switch: 325 lines
    - Paging: 265 lines
    - Common: 530 lines
  - TVM invoked from only 9 locations

Outline

- Introduction
- Hardware Overview
- OS support for virtualization
- Extending virtualization to a VMM
- Evaluation
- Conclusion

Evaluation

- Profile lock-based critical sections
  - Sun T1000 platform - Niagara (8-core 4-way SMT)
- Microbenchmark LogTM-VSE/TVM in simulation
  - GEMS/LogTM-VSE full-system simulation
    - 32 in-order SPARC cores
    - Memory latencies match T1000
    - 2048-byte signatures
- Predict overhead
  - Profiled event count x simulator measured time

Virtualization Overhead

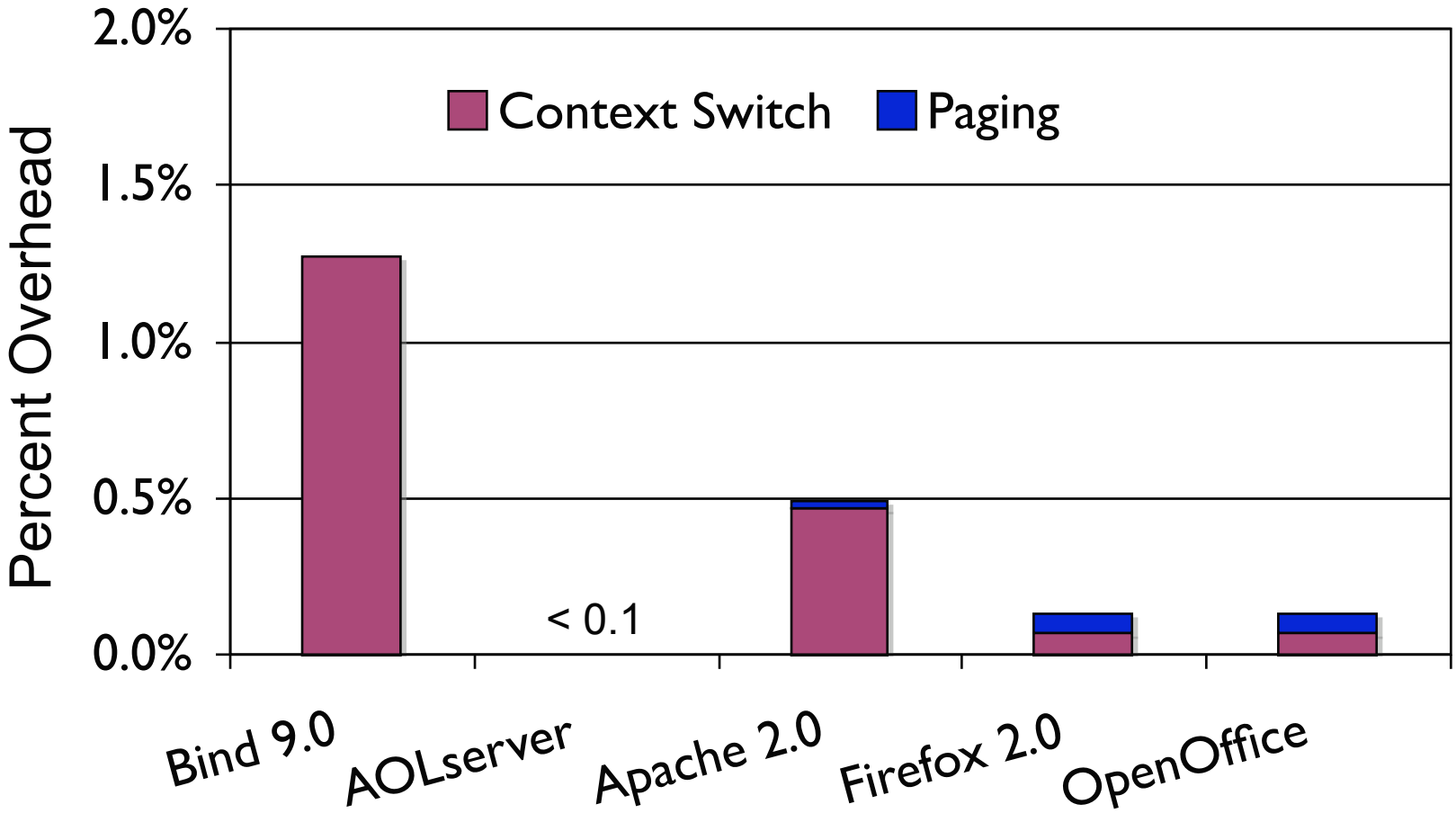

Summary

- We implemented TVM, an OpenSolaris kernel module that:
  - Supports context switching and paging
  - Hooks the kernel in 9 places
  - Comprises 1120 lines of code
  - Adds less than 2% runtime overhead
- Our design supports execution in a VMM and virtualization by a VMM

Questions?

For more information:

swift@cs.wisc.edu

www.cs.wisc.edu/multifacet/logtm