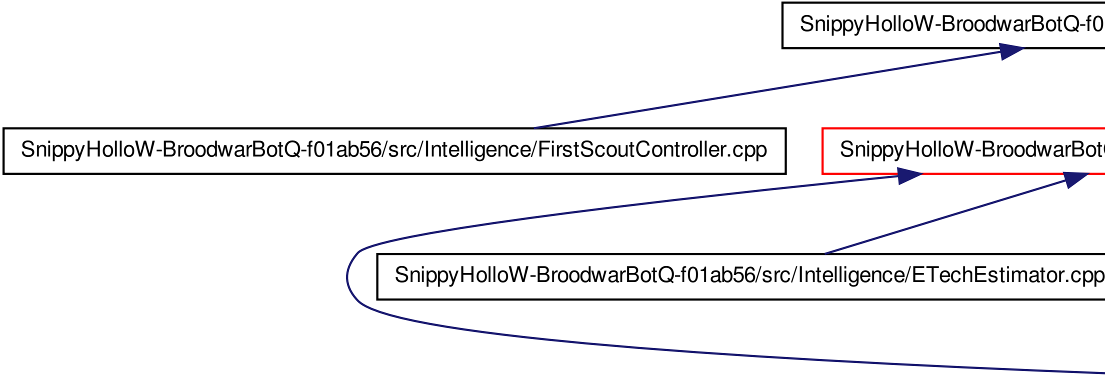
SnippyHolloW-BroodwarBotQ-f0
SnippyHolloW-BroodwarBotQ-f01ab56/src/Intelligence/FirstScoutController.cpp
SnippyHolloW-BroodwarBot
SnippyHolloW-BroodwarBotQ-f01ab56/src/Intelligence/ETechEstimator.cpp

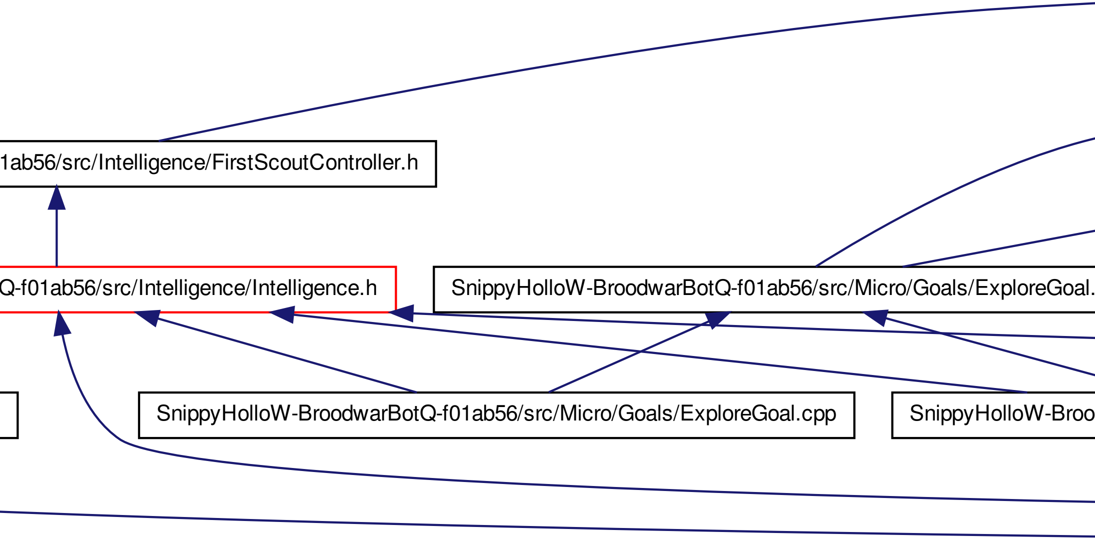
1ab56/src/Intelligence/FirstScoutController.h
Q-f01ab56/src/Intelligence/Intelligence.h
SnippyHolloW-BroodwarBotQ-f01ab56/src/Micro/Goals/ExploreGoal.
SnippyHolloW-BroodwarBotQ-f01ab56/src/Micro/Goals/ExploreGoal.cpp
SnippyHolloW-Broo

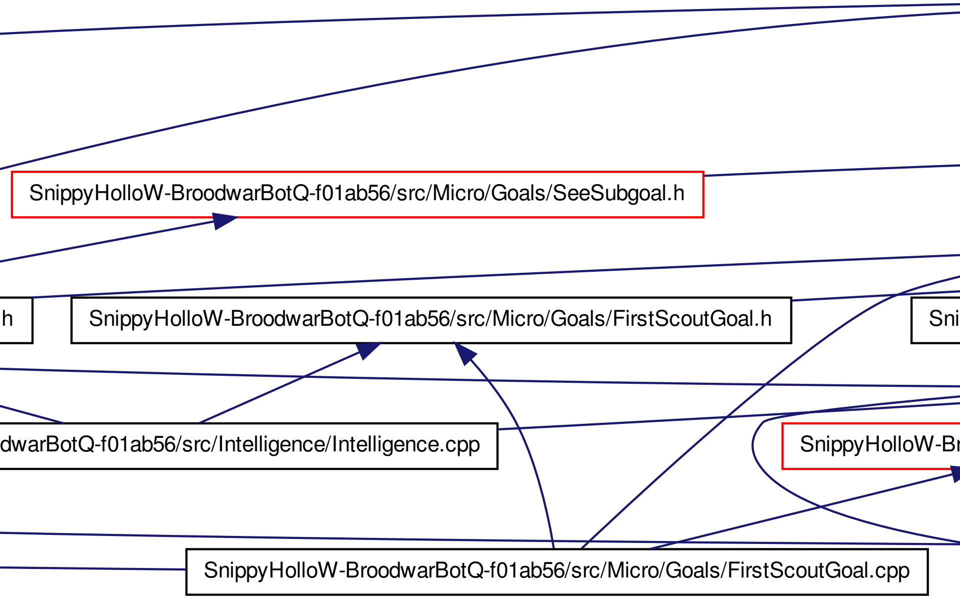
SnippyHolloW-BroodwarBotQ-f01ab56/src/Micro/Goals/SeeSubgoal.h
h
SnippyHolloW-BroodwarBotQ-f01ab56/src/Micro/Goals/FirstScoutGoal.h
Sni
dwarBotQ-f01ab56/src/Intelligence/Intelligence.cpp
SnippyHolloW-Br
SnippyHolloW-BroodwarBotQ-f01ab56/src/Micro/Goals/FirstScoutGoal.cpp

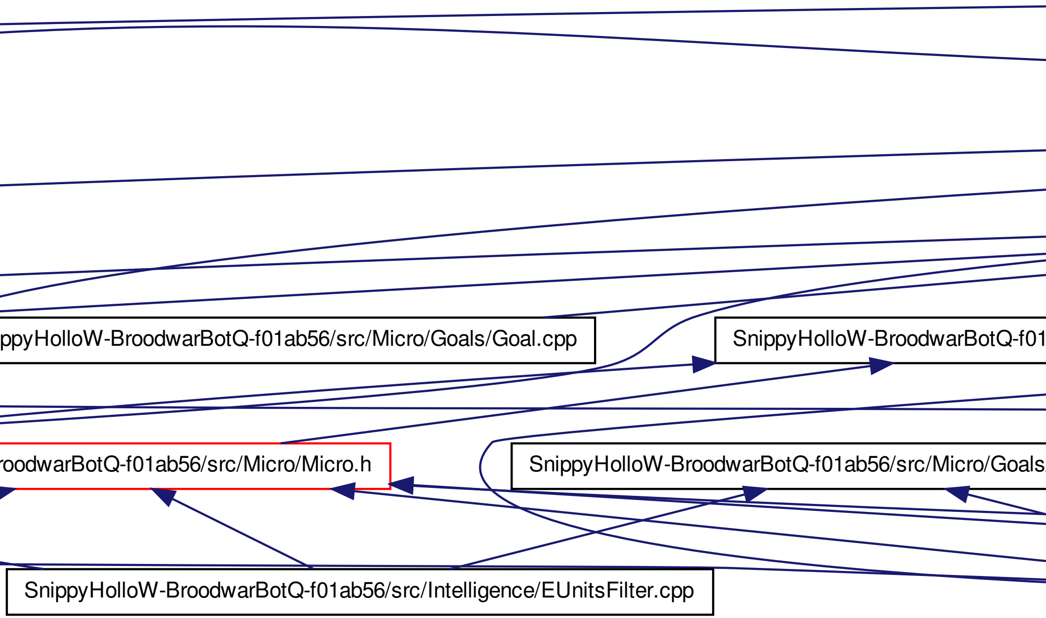
ppyHolloW-BroodwarBotQ-f01ab56/src/Micro/Goals/Goal.cpp
SnippyHolloW-BroodwarBotQ-f01
roodwarBotQ-f01ab56/src/Micro/Micro.h
SnippyHolloW-BroodwarBotQ-f01ab56/src/Micro/Goals
SnippyHolloW-BroodwarBotQ-f01ab56/src/Intelligence/EUnitsFilter.cpp

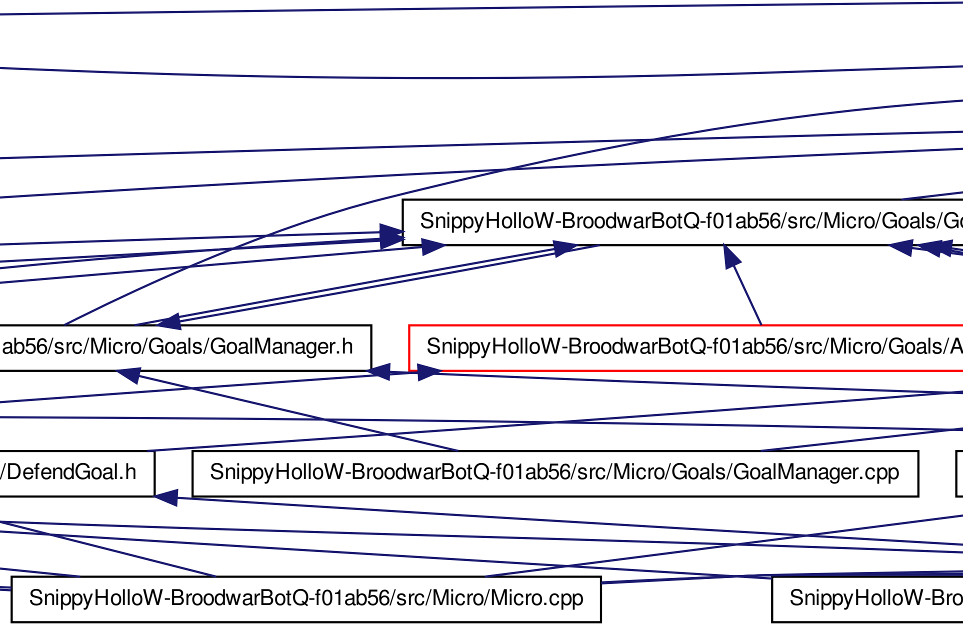
SnippyHolloW-BroodwarBotQ-f01ab56/src/Micro/Goals/Go
ab56/src/Micro/Goals/GoalManager.h
SnippyHolloW-BroodwarBotQ-f01ab56/src/Micro/Goals/A
/DefendGoal.h
SnippyHolloW-BroodwarBotQ-f01ab56/src/Micro/Goals/GoalManager.cpp
SnippyHolloW-BroodwarBotQ-f01ab56/src/Micro/Micro.cpp
SnippyHolloW-Bro

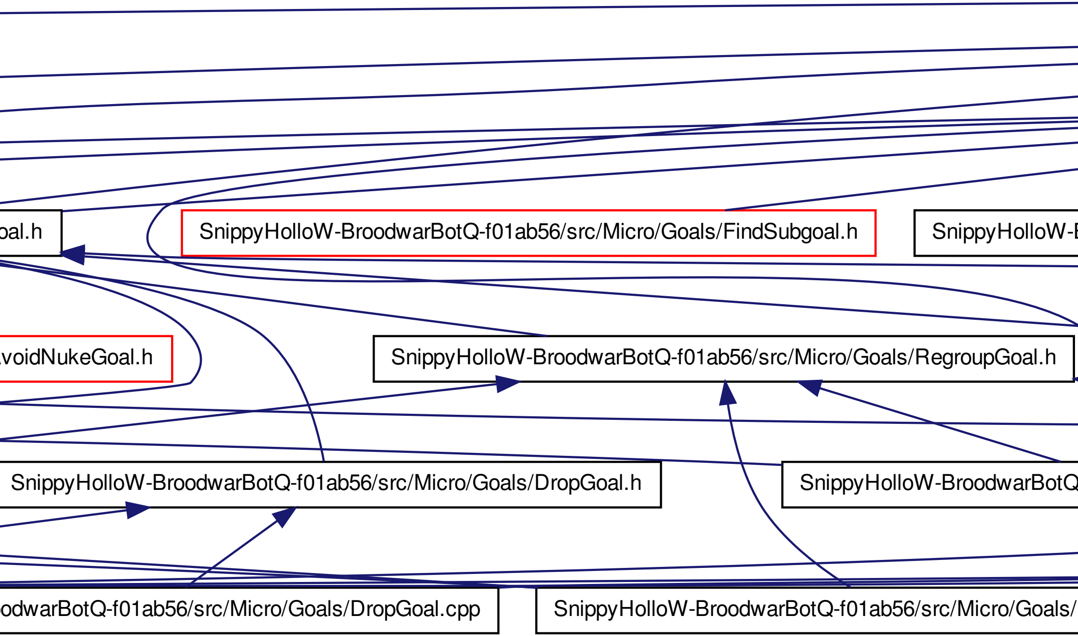
oal.h
SnippyHolloW-BroodwarBotQ-f01ab56/src/Micro/Goals/FindSubgoal.h
SnippyHolloW-
voidNukeGoal.h
SnippyHolloW-BroodwarBotQ-f01ab56/src/Micro/Goals/RegroupGoal.h
SnippyHolloW-BroodwarBotQ-f01ab56/src/Micro/Goals/DropGoal.h
SnippyHolloW-BroodwarBotQ
odwarBotQ-f01ab56/src/Micro/Goals/DropGoal.cpp
SnippyHolloW-BroodwarBotQ-f01ab56/src/Micro/Goals/

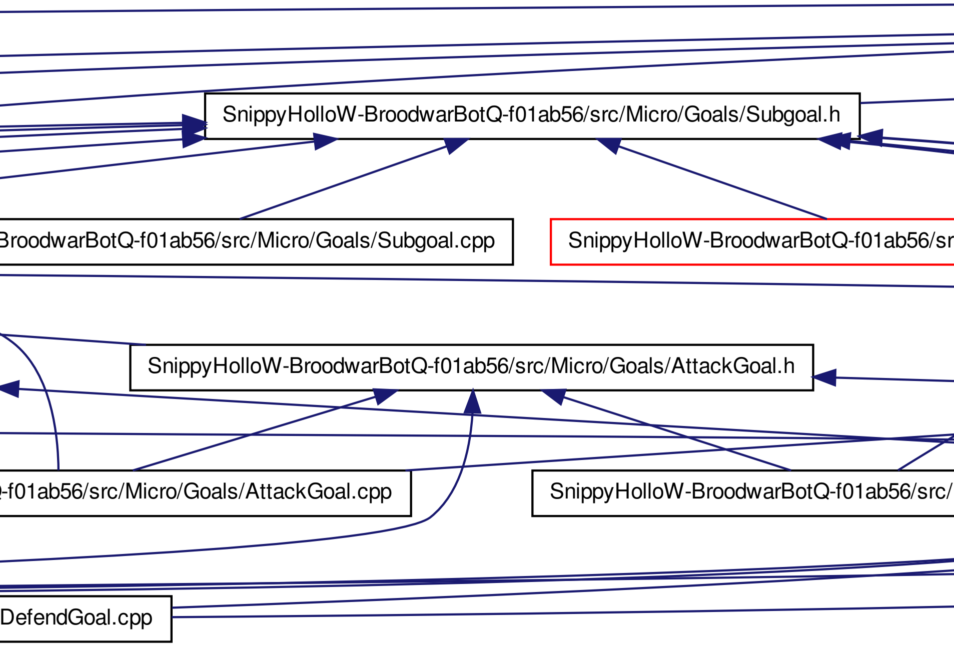
SnippyHolloW-BroodwarBotQ-f01ab56/src/Micro/Goals/Subgoal.h
BroodwarBotQ-f01ab56/src/Micro/Goals/Subgoal.cpp
SnippyHolloW-BroodwarBotQ-f01ab56/sr
SnippyHolloW-BroodwarBotQ-f01ab56/src/Micro/Goals/AttackGoal.h
-f01ab56/src/Micro/Goals/AttackGoal.cpp
SnippyHolloW-BroodwarBotQ-f01ab56/src/
DefendGoal.cpp

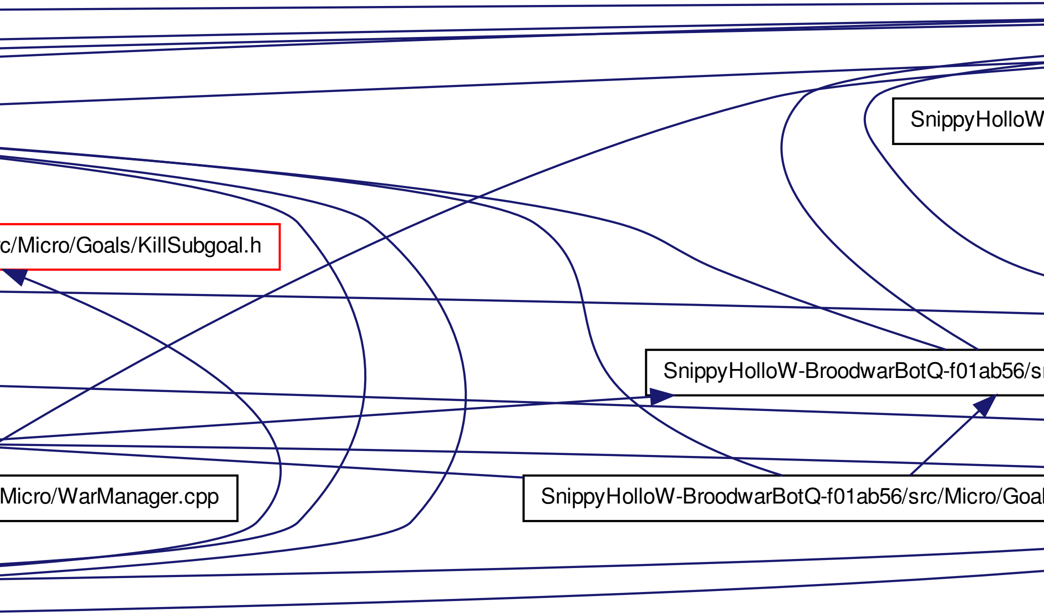
SnippyHolloW
c/Micro/Goals/KillSubgoal.h
SnippyHolloW-BroodwarBotQ-f01ab56/sr
Micro/WarManager.cpp
SnippyHolloW-BroodwarBotQ-f01ab56/src/Micro/Goal

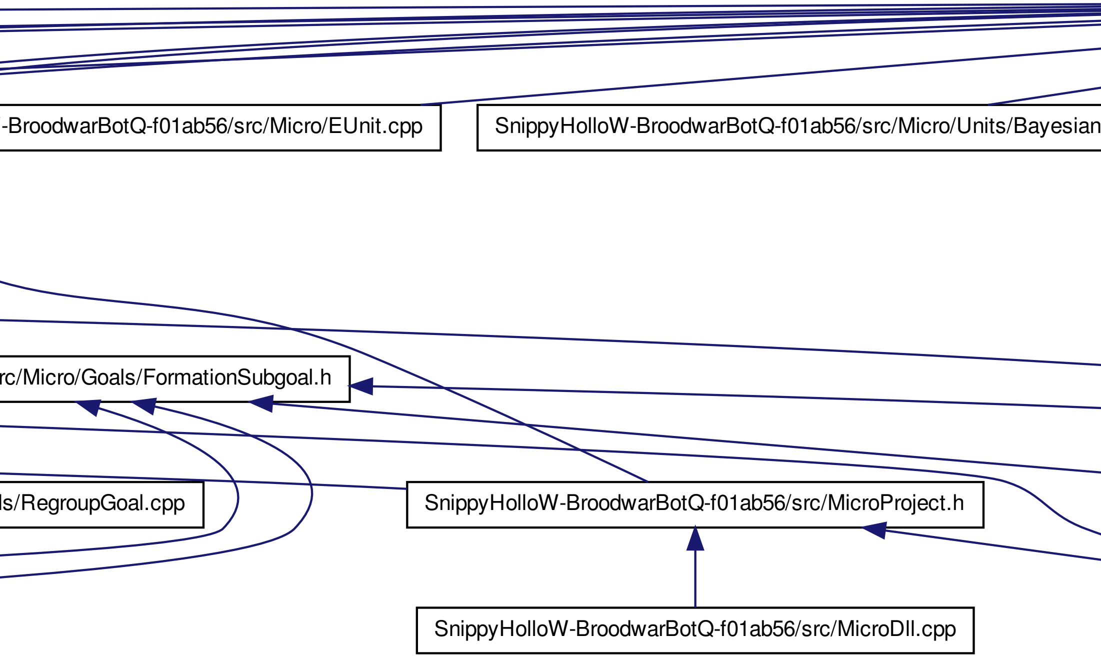
-BroodwarBotQ-f01ab56/src/Micro/EUnit.cpp
SnippyHolloW-BroodwarBotQ-f01ab56/src/Micro/Units/Bayesian
rc/Micro/Goals/FormationSubgoal.h
ls/RegroupGoal.cpp
SnippyHolloW-BroodwarBotQ-f01ab56/src/MicroProject.h
SnippyHolloW-BroodwarBotQ-f01ab56/src/MicroDll.cpp

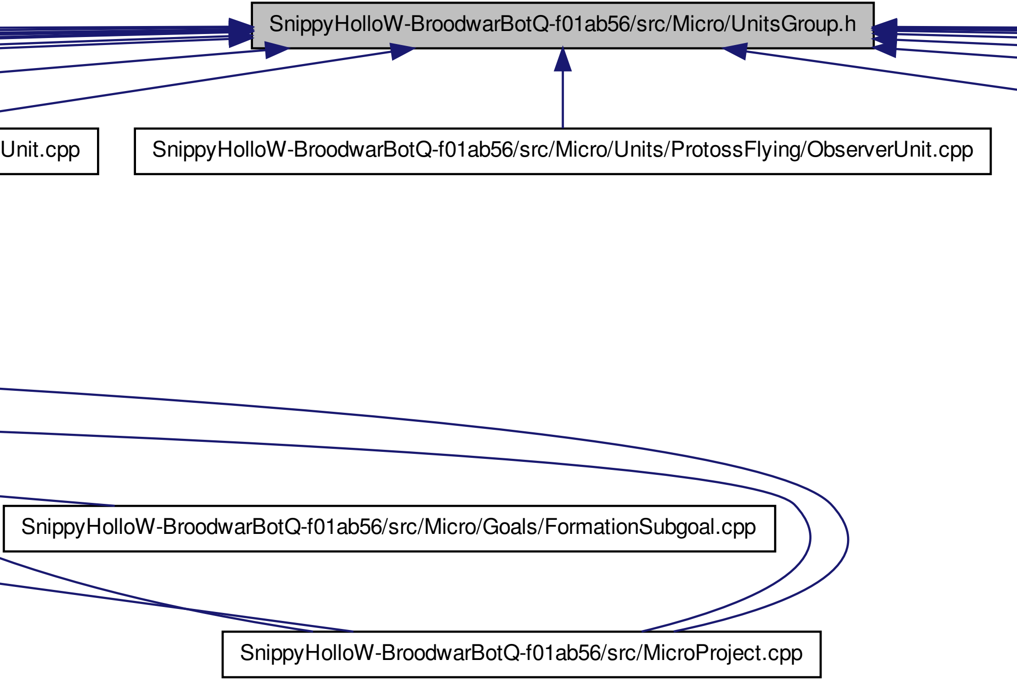
SnippyHolloW-BroodwarBotQ-f01ab56/src/Micro/UnitsGroup.h
Unit.cpp
SnippyHolloW-BroodwarBotQ-f01ab56/src/Micro/Units/ProtossFlying/ObserverUnit.cpp
SnippyHolloW-BroodwarBotQ-f01ab56/src/Micro/Goals/FormationSubgoal.cpp
SnippyHolloW-BroodwarBotQ-f01ab56/src/MicroProject.cpp

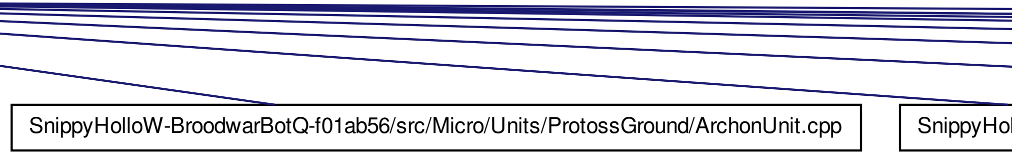

SnippyHolloW-BroodwarBotQ-f01ab56/src/Micro/Units/ProtossGround/ArchonUnit.cpp
SnippyHol

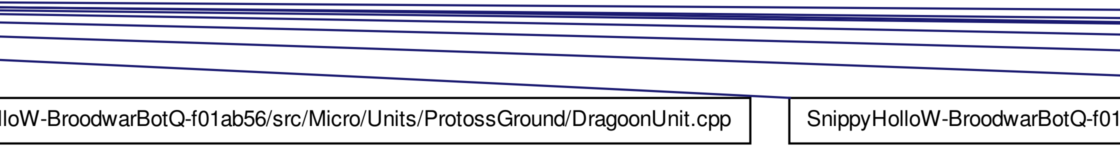
lloW-BroodwarBotQ-f01ab56/src/Micro/Units/ProtossGround/DragoonUnit.cpp
SnippyHolloW-BroodwarBotQ-f01

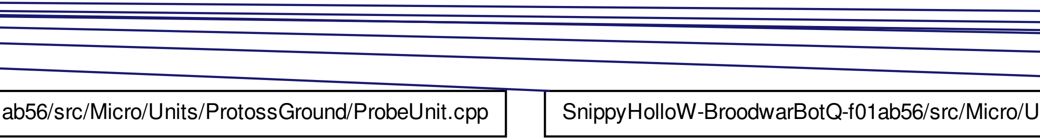
ab56/src/Micro/Units/ProtossGround/ProbeUnit.cpp
SnippyHolloW-BroodwarBotQ-f01ab56/src/Micro/U

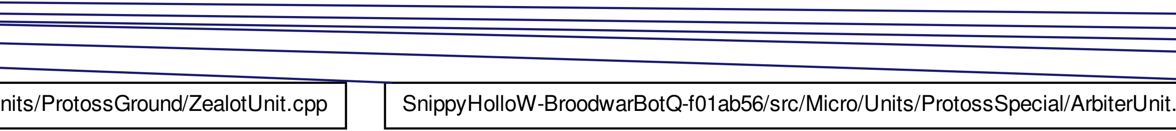
nits/ProtossGround/ZealotUnit.cpp
SnippyHolloW-BroodwarBotQ-f01ab56/src/Micro/Units/ProtossSpecial/ArbiterUnit.

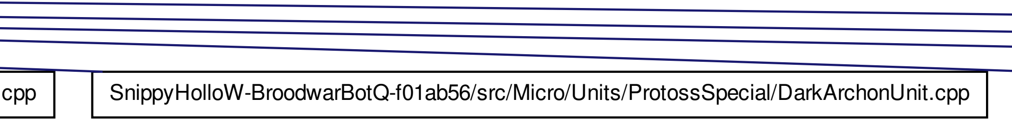
cpp
SnippyHolloW-BroodwarBotQ-f01ab56/src/Micro/Units/ProtossSpecial/DarkArchonUnit.cpp

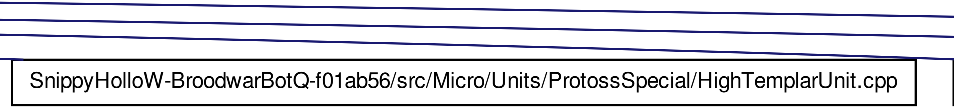
SnippyHolloW-BroodwarBotQ-f01ab56/src/Micro/Units/ProtossSpecial/HighTemplarUnit.cpp

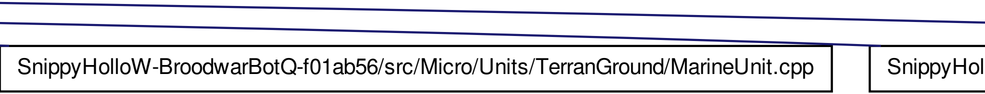
SnippyHolloW-BroodwarBotQ-f01ab56/src/Micro/Units/TerranGround/MarineUnit.cpp
SnippyHol

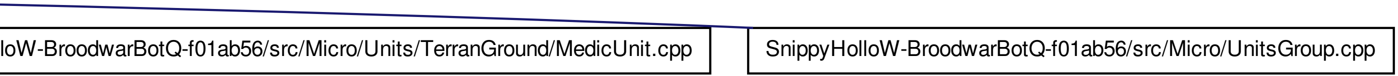
loW-BroodwarBotQ-f01ab56/src/Micro/Units/TerranGround/MedicUnit.cpp
SnippyHolloW-BroodwarBotQ-f01ab56/src/Micro/UnitsGroup.cpp